Expert Tips and Hints

4x4 Vehicle Design Process

s

Sponsored & Supported by:

IET Education The Institution of Engineering and Technology

DENFORD

eim ENGINEERING IN MOTION INNOVATIVE EDUCATIONAL PROJECTS

How & Why did they end up with this design?

4x4 Off Road Vehicle

Why this bumper shape

What do all these bits do?

Why these tyres

Land Rover Discovery II – Front Beam Axle suspension during articulation

Why this design / type?

What's this?

Sponsored & Supported by:

IET Education The Institution of Engineering and Technology

DENFORD

eim ENGINEERING IN MOTION INNOVATIVE EDUCATIONAL PROJECTS

What is Design

Who or What is a Designer?

"A person who imagines how something could be made and draws plans for it"

(Cambridge On-line Dictionary)

4x4 in Schools Technology Challenge?

To design and build a 4x4 vehicle that will negotiate a series of obstacles and tests

So, Design in this case will be:

The process of imagining and creating solutions which enable our 4x4 vehicle to successfully travel over the differing conditions of the test track.

Design Process

Problem Definition

Ideas Creation

Concept Generation

Concept Selection

Development

Manufacture

Test

The Finished Solution!

- Define the Problem!
  - What is it we are trying to
- What are our objectives?
  - What **must** our design do
  - What would we **like** it to do?
  - If we are successful, what will we have achieved?

Sponsored & Supported by:

IET Education The Institution of Engineering and Technology

DENFORD

eim ENGINEERING IN MOTION INNOVATIVE EDUCATIONAL PROJECTS

Design Process

Boulders

Parking / Size Limits

Luggage

Cornering

Motorways

Mud

Snow / Ice

Towing

People

Fuel Consumption

Steep Slopes

Water / Wading

Some examples of requirements which need to be considered for designing a 4x4 vehicle

Sponsored & Supported by:

IET Education The Institution of Engineering and Technology

DENFORD

eim ENGINEERING IN MOTION INNOVATIVE EDUCATIONAL PROJECTS

Problem Definition

Basic geometry affects ability to negotiate obstacles

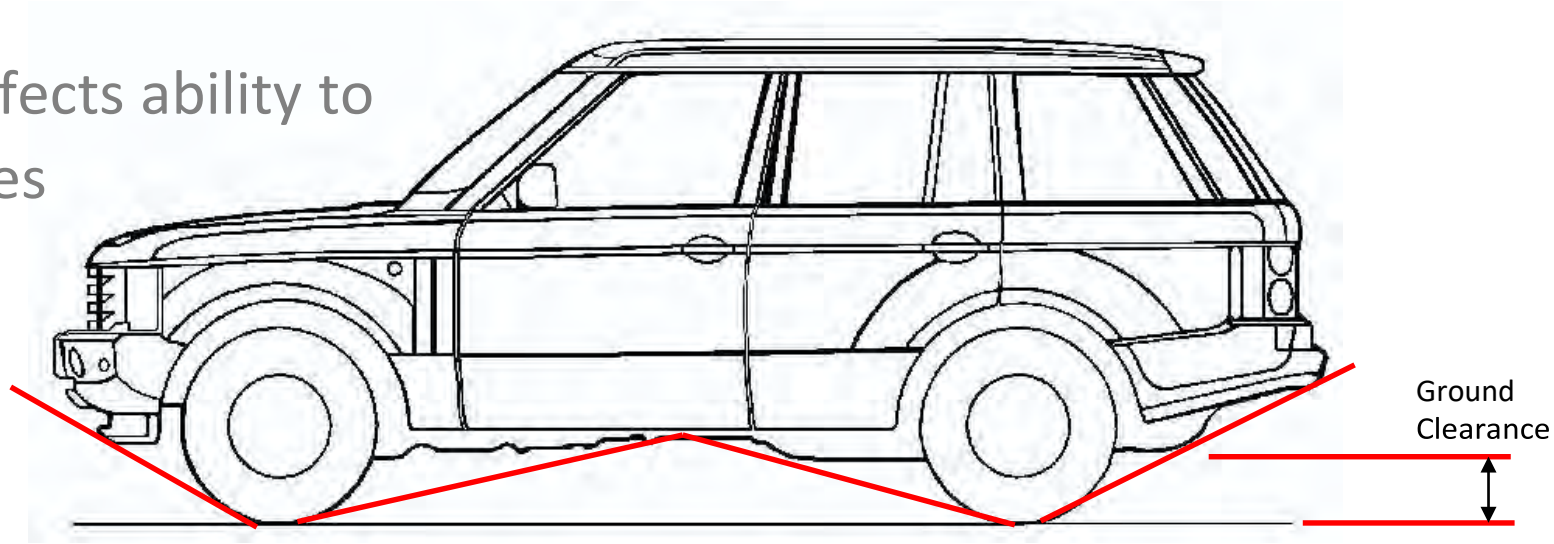

Approach angle

Ramp over angle

Departure angle

Sponsored & Supported by:

IET Education The Institution of Engineering and Technology

DENFORD

eim ENGINEERING IN MOTION INNOVATIVE EDUCATIONAL PROJECTS

Problem Definition

These are just **some** of the requirements a real 4x4 vehicle must have to enable it to the job required.

Ask yourself:

- Which of these does your 4x4 vehicle need to do?
- Anything your 4x4 model needs to do that a real 4x4 vehicle doesn't?
- Just as importantly, what does your 4x4 model NOT need to do?

Identifying this correctly could enable you to simplify the design…

Sponsored & Supported by:

IET Education The Institution of Engineering and Technology

DENFORD

eim ENGINEERING IN MOTION INNOVATIVE EDUCATIONAL PROJECTS

Design Process

Problem Definition

Ideas Creation

Concept Generation

Concept Selection

Development

Manufacture

Test

The Finished Solution!

- New & Old
- How do other people do
- Could we adapt a solution from a different industry / area?
- Individual ideas to whole
- "Brainstorming":
  - Each Team Member individually think of as many ideas as possible, then
  - As a team, collate ideas, discuss, develop = any more new ideas / developments?

Sponsored & Supported by:

IET Education The Institution of Engineering and Technology

DENFORD

eim ENGINEERING IN MOTION INNOVATIVE EDUCATIONAL PROJECTS

Ideas Creation

Sponsored & Supported by:

IET Education
The Institution of Engineering and Technology

DENFORD

eim
ENGINEERING IN MOTION
INNOVATIVE EDUCATIONAL PROJECTS

Ideas Creation

What other sources for ideas are there?

Consider:

- **How do they steer?**
- **What suspension system do they use?** (Does it even have any suspension – if not, how does it cope with rough terrain?)
- **How do they drive the "wheels"?**
- **What sort of terrain can they cross, and how?** What design features make this possible?
- **How are they manufactured?** Could it be made in a different way / material / more simply?

- How could these ideas or principles be used for your model?
- Can you adapt or evolve any of the ideas to suit your purpose?

Sponsored & Supported by:

IET Education The Institution of Engineering and Technology

DENFORD

eim ENGINEERING IN MOTION INNOVATIVE EDUCATIONAL PROJECTS

Ideas Creation

Brainstorming Sheet
Team Member: Kay

Suspensio system from a Dodgy Motors Dingo
Magnesim drive system & steering

Brainstorming Sheet
Team Member: Fred

Suspension system fro
Magnesium drive syst
Martian Tripod
Elipticalshaped bearing
Electric toothbrush
British Telecom Tower
Tyres from a Hewlettd
Simple steering syster
Aeroplane landing gea
Sydney Harbour Bridg
Telephone receiver de
Hewlett Packard XP7a
Infinite improbability d
Ford Fiesta wiper med
Potato peeler handle
Sticky backed plastic
material

Brainstorming Sheet
Team Member John
Suspension system from a Dodgy Motors Dingo
Magnesium drive system & steering
Martian Tripod
Eliptical shaped bearings
Electrical toothbrush
British Telecom Tower – window design
Tyres from a Turbo Yoki4x4 vehicle
Simple steering system from a FrogmasterIV
Aeroplane landing gear
Sydney Harbour Bridge pivots
Telephone receiver design
Hewlett Packard XP7a concept vehicle
Infinite improbability drive
Ford Fiesta wiper mechanism –use as adjuster
Potato peeler handle
Sticky backed plastic –use as main construction
material

Capture / Explain ideas in more detail… (drawings, sketches, explanations)

IDEA: vehicle layout
Team Member: Fred
Sketch or Pictures:

IDEA: concept XP7a
Team Member: John
Sketch or Pictures:

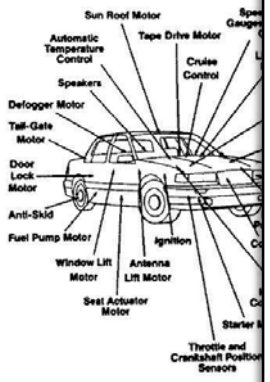

IDEA: steering idea
Team Member: Kay
Sketch or Pictures:

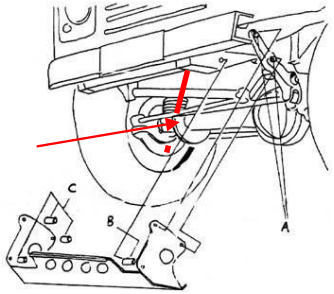

Description & Advantages
Works like a Defender 4x4, but instead of steering about axis (X) it rotates about point (Y) and uses links (L) to attach to the frame (F) as doesn't need to perform like a real car at high speed function. Should therefore be easier to design than conventional system.

Sponsored & Supported by:
IET Education The Institution of Engineering and Technology
DENFORD

Design Process

Problem Definition

↓

Ideas Creation

↓

Concept Generation

↓

Concept Selection

↓

Development

↓

Manufacture

↓

Test

↓

The Finished Solution!

- Sort the ideas into groups, e.g.
  - Not suitable; suitable; very suitable
  - easy; moderate; difficult (technology)
- Generate 2 to 4 differing Concepts incorporating one or more of the “best ideas” which you think would deliver a good chance of meeting your objectives
  - Could try a scoring system to aid selection / rank ideas
- Remember, K.I.S.S.! Simple ideas are more likely to work and will be easier to deliver - unnecessary complication does not make a design better

Sponsored & Supported by:

IET Education The Institution of Engineering and Technology

DENFORD

	Very Suitable	Maybe	Not Suitable
Easy	Vehicle B Vehicle C suspension principle Tyres from vehicle G Suspension type F	Vehicle T Suspension Y Driveline from vehicle G	Vehicle A Using a zzzzzzz as a spring Suspension Q
Moderate	Suspension D with John"s spring idea Kay"s idea for steering Using electric toothbrush motor to drive adjuster widget	Suspension D John"s idea for steering Use a yyyyyyy as a spring	Steering concept 4 Manual adjuster widget
Difficult	Use a xxxxxxx as a spring Fred"s vehicle concept idea Suspension Z	Using motor from vacuum cleaner to drive the adjuster widget	Vehicle L

Concept Generation

Concept 1:

Based on Vehicle B but with suspension Z at rear; tyres from vehicle G. Base assumption conventional spring but investigate using xxxxxxx spring as alternative.

Concept 2:

Based around Kay's steering idea with suspension F, but may rely on driveline from vehicle G – needs further development to decide

Concept 3:

Fred's vehicle concept + suspension F

Concept 4:

Vehicle T but using suspensionD with John's idea to see if it solves main issue

Sponsored & Supported by:

IET Education The Institution of Engineering and Technology

DENFORD

eim ENGINEERING IN MOTION INNOVATIVE EDUCATIONAL PROJECTS

Concept Creation

- Important to record why you grouped the concepts the way you did:
  - What was it about the idea that made it a good one?
  - What was it about the idea that made it unsuitable, e.g.:
    - didn't meet the Challenge Constraints (e.g. tracked vehicle – not allowed)
    - design not expected to perform as required, i.e. doesn't meet objectives
  - Will more than likely come back several times to re-address / re-evaluate the decisions you make – documenting makes this easier!
- Refer frequently back to your objectives to maintain a focus on what it is you're trying to achieve…
- Note how Concepts 2 and 4 have very similar overall scores. However, Concept 2 is easier to make (high manufacturing score), but Concept 4 achieves its objectives better, especially in the "must do" categories…

Design Process

Problem Definition
↓
Ideas Creation
↓
Concept Generation
↓
Concept Selection
↓
Development
↓
Manufacture
↓
Test
↓
The Finished Solution!

- Consider each of the 2 to 4 Concepts in more detail:
  - How might we make
  - How well do we think it might perform?
  - Do we think it would be robust?
  - How well do we think it would satisfy our "must do / objectives" list?
  - What's special about this Concept?

  This will require some limited design work for each Concept, and maybe some simple test models (prototypes) to prove out each Concept's design fundamentals
- Decide on the best Concept to take forward to the next stage and develop in detail

Sponsored & Supported by:
IET Education The Institution of Engineering and Technology
DENFORD
eim ENGINEERING IN MOTION INNOVATIVE EDUCATIONAL PROJECTS

Concept Selection

Subjective Ratings	"Must Do" 1 (10)	"Must Do" 2 (8)	"Must Do" 3 (5)	"Must Do" 4 (5)	Objective 1 (8)	Objective 2 (7)	Objective 3 (5)	Manufacture (10)	Score
Concept 1	5	6	3 fail	10	6	7	9	5	fail
Concept 2	5	6	8	6	10	1	5	10	380
Concept 3	8	6	9	1	4	2	1	8	309
Concept 4	6	8	5	8	8	7	4	5	372

Can the concept be changed to make it work?

5x10 + 6x8 + 8x5 + 6x5 + 10x8 + 1x7 + 5x5 + 10x10 = 380

8x10 + 6x8 + 9x5 + 1x5 + 4x8 + 2x7 + 1x5 + 8x10 = 309

6x10 + 8x8 + 5x5 + 8x5 + 8x8 + 7x7 + 4x5 + 5x10 = 372

Could set a minimum score remit for any "must do", i.e. < 5 = automatic fail
Same for "manufacture"? The best design is no good if you can't make it!

Numbers in brackets are weighting factors for more important requirements (score multipliers)

Sponsored & Supported by:

IET Education The Institution of Engineering and Technology

DENFORD

eim ENGINEERING IN MOTION INNOVATIVE EDUCATIONAL PROJECTS

- Note how Concepts 2 and 4 have very similar overall scores. However,
  - Concept 2 is easier to make (high manufacturing score), but
  - Concept 4 achieves its objectives better, especially in the “must do” categories…
- Which one should you choose? A real world dilemma!

Problem Definition

Ideas Creation

Concept Generation

Concept Selection

Development

Manufacture

Test

The Finished Solution!

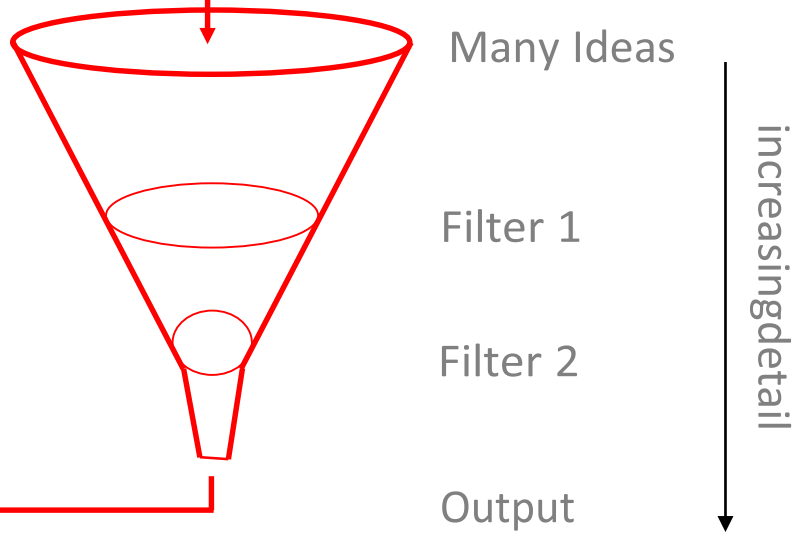

The "Design Funnel"

Starts with many ideas containing little detail, progressively filtering them down to a few of the best concepts in much greater detail

Sponsored & Supported by:

IET Education The Institution of Engineering and Technology

DENFORD

eim ENGINEERING IN MOTION INNOVATIVE EDUCATIONAL PROJECTS

Design Process

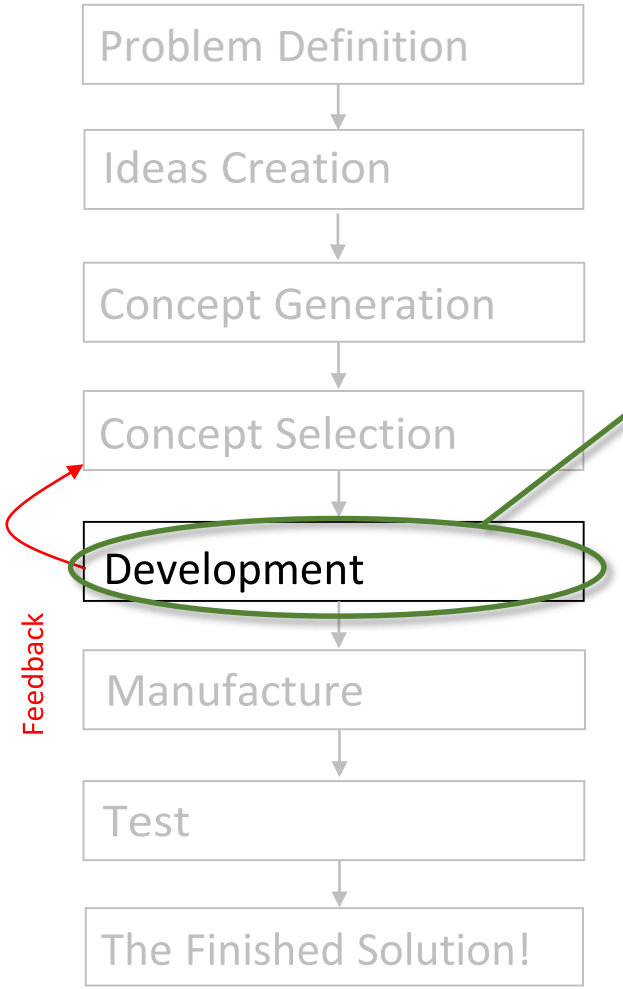

- Detail design, actual sizes and construction determined
- Can start to calculate actual performance - will the concept perform as expected?
- Need to
  - Evolve the design; don't throw away a good idea until we are sure it won't work! Important to maintain resolve to try and solve issues to deliver
- With:
  - Now we know better any limitations of our concept, are there alternate ideas from the other concepts that could enhance this
- How good was our Concept Selection phase? Do we need to re consider?

Sponsored & Supported by:

IET Education The Institution of Engineering and Technology

DENFORD

eim ENGINEERING IN MOTION INNOVATIVE EDUCATIONAL PROJECTS

Design Process

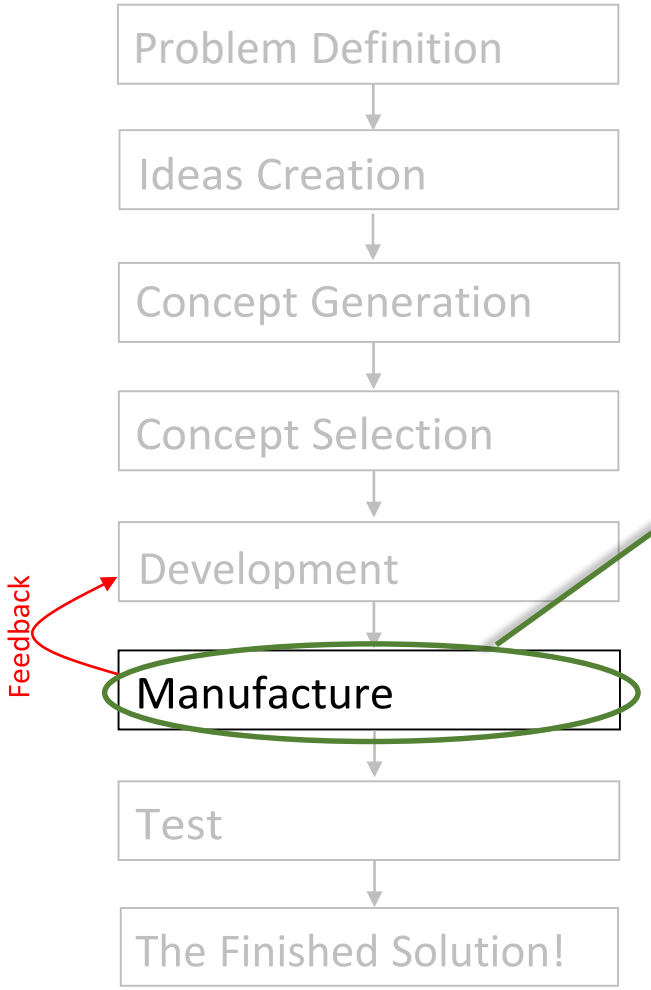

- Build the concept!
- Are there any changes to the design required in order to build the vehicle?
  - How well did we consider the manufacturing requirements during the design phases?
- Consider how different construction methods will affect the ability to carry out repairs or design

Sponsored & Supported by:

Design Process

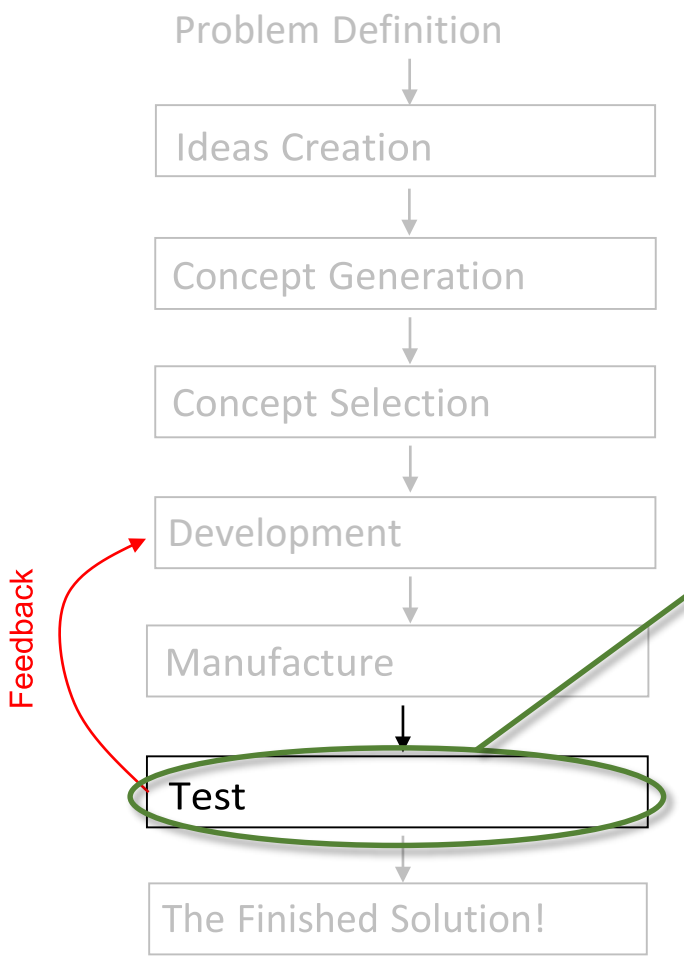

- What tests should we conduct on the concept?
  - Are they representative / sufficient?
- Does the Concept perform as required?
- What failures do we see?
  - Could we have predicted them?
  - How should we modify the design to stop the failures re occurring?
  - Note that 'failures' refers to 'failure to meet objectives' as well as 'broken'!
- Does the testing show we could modify the design to enhance its performance further?

Sponsored & Supported by:

IET Education The Institution of Engineering and Technology

DENFORD

eim ENGINEERING IN MOTION INNOVATIVE EDUCATIONAL PROJECTS

4x4 Vehicle Testing

Side slope test (35 deg)

Testing traction on muddy slope

Gulley / ditch test

Some examples of real tests

Articulated traction test
(2 wheels just contacting floor –can the vehicle drive forward?)

Articulation ramp
(How high can one wheel get with the other 3 still in contact with the floor?)

Hydraulic rig test (durability)

Sponsored & Supported by:

IET Education The Institution of Engineering and Technology

DENFORD

eim ENGINEERING IN MOTION INNOVATIVE EDUCATIONAL PROJECTS

Design Process

Problem Definition
↓
Ideas Creation
↓
Concept Generation
↓
Concept Selection
↓
Development
↓
Manufacture
↓
Test
↓
The Finished Solution!

- How did we do?
  - Did we meet all our objectives?
  - What compromises did we need to make to the original concept in order to deliver a finished working
- Most importantly, what did we learn How would we do it better next time?

Sponsored & Supported by:

IET Education The Institution of Engineering and Technology

DENFORD

Finished Design

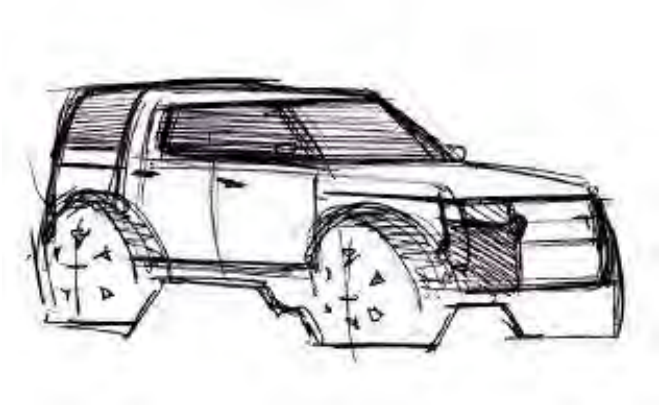

From initial through…

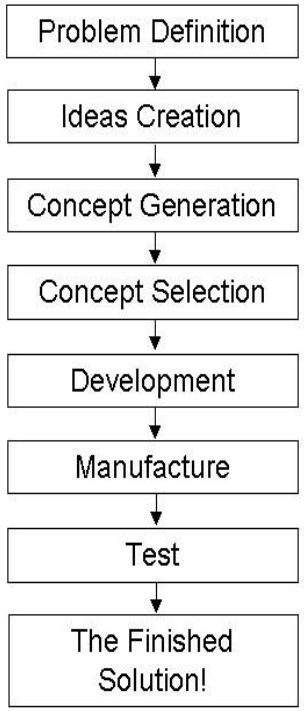

…Design Process, to…

Design sketch,

Finished Product

Tips

- A real car takes a team of around 300 or more people over 3 years to develop. **You don't have that long or that many people!**
  - Keep it simple
  - The best ideas are usually developments of existing ideas or technology applied in new or innovative ways…
- **There is rarely such a thing as 'right' or 'wrong' in design**, only decision making helped by experience and previous learning
  - Document your decisions so you can re-evaluate when required
- It is virtually impossible to develop a concept to a working design **without making some compromises**, but the best designs will have decided **what can be compromised and what can't!**
  - Set your objectives at the beginning
  - Be realistic but challenging
- **Don't be afraid to voice an idea, and never stifle other people's creativity**
  - The thought of Man flying only a hundred years ago was considered preposterous…!
    - *You never know, it might just work!!*

Terminology

- Approach Angle – The angle between an imaginary line drawn tangential from the front tyre to the bodywork and the ground. A good approach angle generally means large obstacles or steep hills can be approached without damaging the body. See slide 9.
- Departure Angle – The angle between an imaginary line drawn tangential from the rear tyre to the bodywork and the ground. A good departure angle generally means the vehicle's tail avoids contacting the ground and possibly damaging the body as the vehicle starts to climb a steep hill or obstacle. See slide 9.
- Ramp-over Angle – The angle between imaginary lines drawn tangential from the front and rear tyres to a midpoint between the wheels on the underside of the vehicle and the ground. A good ramp-over angle generally means the vehicle's underside avoids contacting the ground as it passes over the apex of a steep hill / obstacle. See slide 9.
- Axle – refers to a pair of wheels, either at the front or at the rear of the vehicle. In the past usually referred to a driven beam axle, but now can also be used to describe a pair of wheels with independent suspension.
- Beam Axle – A driven axle where both wheels are joined by a solid beam between them. See slide 3.
- Axle Articulation – On an axle, the total displacement (distance moved) when the suspension on one side is fully compressed and the other side is fully extended. Increased axle articulation generally means the vehicle's suspension can cope with larger obstacles. See slide 3.

- Suspension – A system whose primary function is to keep the vehicle's wheels (or other device) in contact with the ground under varying conditions. Its secondary function is to isolate ground inputs (eg bumps) from the vehicle to provide a smoother, more comfortable ride.
- Independent Suspension – A system where the suspension on each side can operate independently from the other, unlike a beam axle suspension where a wheel input on one side also affects the wheel on the opposite side of the axle.
- Traction – the ability to transfer the rotation force (torque) on a wheel (for example) into a movement of the vehicle. Relies on a contact friction (grip) between the wheel and the ground. No grip = no traction!
- Differential – A geared device which enables driven wheels to rotate at different speeds whilst transmitting torque. Required because as a typical vehicle turns a corner, each wheel takes a different radius around the bend and therefore travels at a different speed. Many 4x4's have 3 differentials (front, rear, centre) some of which can be 'locked' at low speeds on slippery surfaces to prevent wheel spin and possible loss of traction.